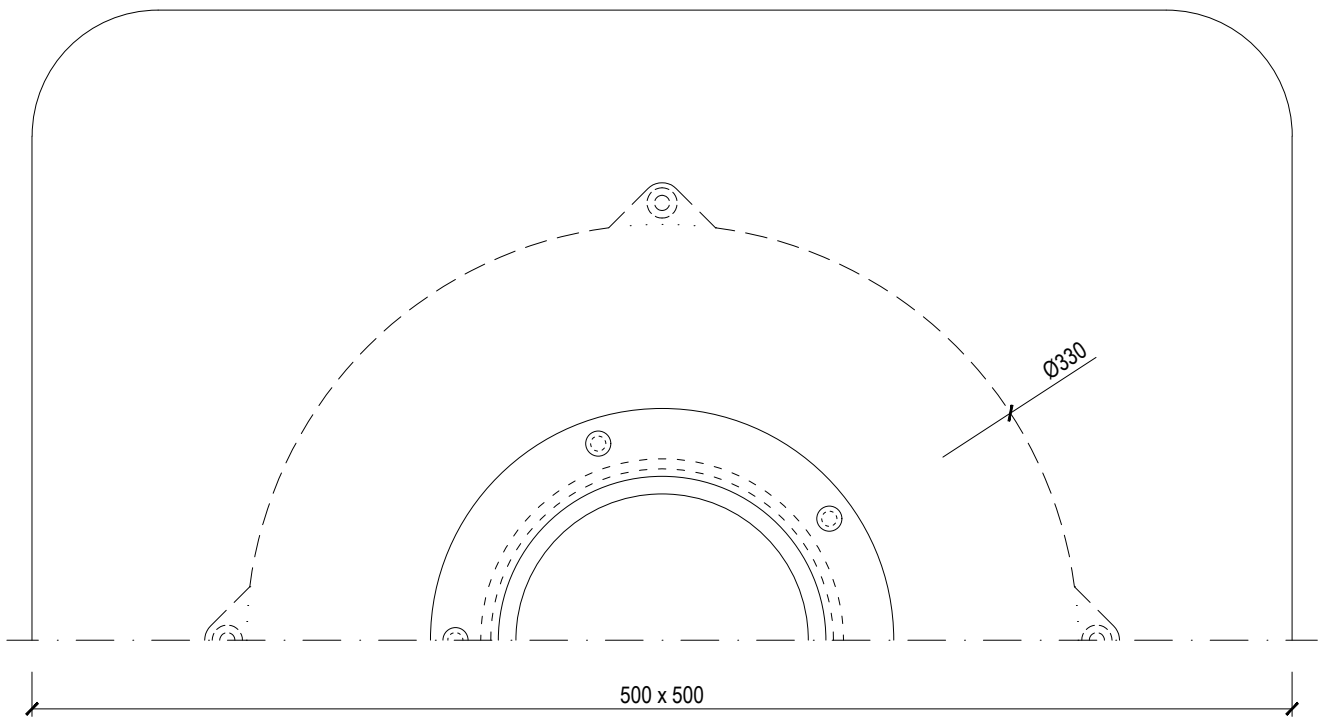

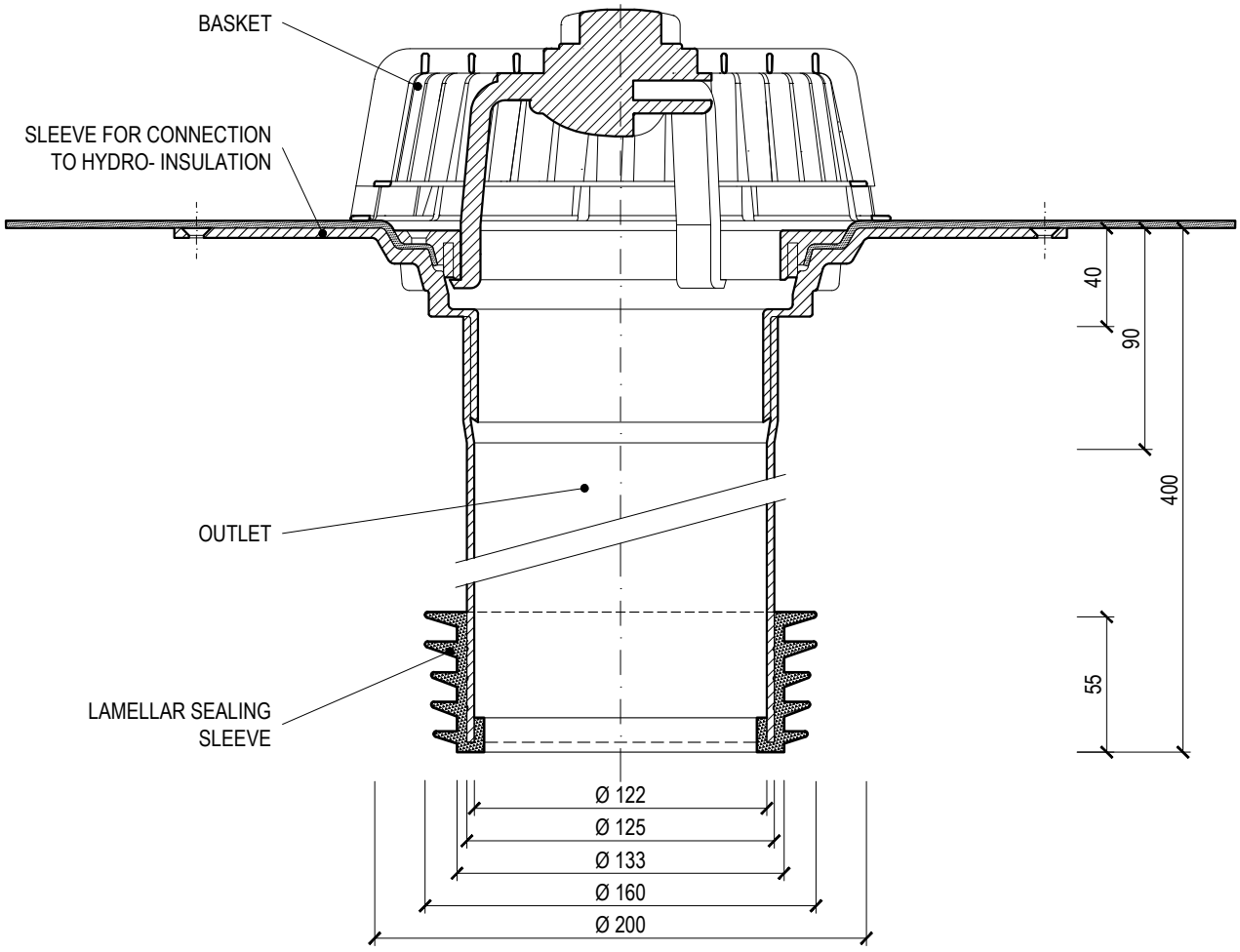

SANITATION OUTLET

TYPE: TW SAN 125 ___	___ = custom-made sleeve (TPO, PE, EDPM, STE,...)	TOPWET ROOF ELEMENTS
CODE: 215810125	WEIGHT: 2,18 kg	WWW.TOPWET.CZ
SCALE: 1:3	MATERIAL: POLYAMIDE	INFO: +420 777 701 241